Quick Guide

Inverter
1200VA/ 2400VA

V. 1.0

37-102768-00G

1. Introduction

Thank you for purchasing this product. This compact inverter is designed to power your home appliances or precious 3C electronics. It also can handle motor-type loads with high surge power such as vacuums, small freezers, or drills.

2. Product Overview

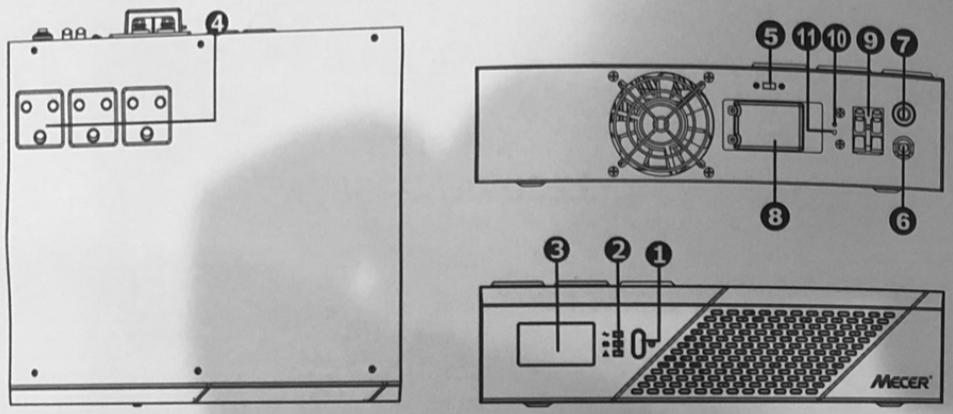

1. Power Switch
2. Status indicators
3. LCD display

Please see the Operation section for the details of LED and LCD display.

4. Output receptacles
5. Charge current selector: 10 A or 20 A
6. AC input
7. Circuit breaker
8. External battery connectors
9. Solar panel terminal (Option)
10. Solar charging indicator (Option)
11. Charger fault indicator (Option)

3. Important Safety Warning (SAVE THESE INSTRUCTIONS)

Before using the inverter, please read all instructions and cautionary markings on the unit, this manual and the batteries.

General Precaution-

Conventions used:

WARNING! Warnings identify conditions or practices that could result in personal injury;

CAUTION! Caution identify conditions or practices that could result in damaged to the unit or other equipment connected.

CAUTION! The unit is designed for indoor use. Do not expose this unit to rain, snow or liquids of any type.

CAUTION! To reduce risk of injury, only use qualified batteries from qualified distributors or manufacturers. Any unqualified batteries may cause damage and injury. Do NOT use old or overdue batteries. Please check the battery type and date code before installation to avoid damage and injury.

WARNING! It's very important for system safety and efficient operation to use appropriate external battery cable. To reduce risk of injury, external battery cables should be UL certified and rated for 75° C or higher. And do not use copper cables less than 10AWG. Below is the external battery cable reference according to system requirements.

Table 1 Minimum Recommended Battery Cable Size versus Length

Model	Typical Amp.	1 meter (one-way)	Dia-mm
Inverter 1200VA	75 A	AWG 3	5.8272
Inverter 2400VA	75 A	AWG 3	5.8272

Table 2 External Battery Cable Size Reference

AWG	Dia-mm	Ohms/Kft
0000(4/0)	11.684	0.049
000(3/0)	10.405	0.0618
00(2/0)	9.2657	0.0779
0(1/0)	8.2513	0.0983
1	7.348	0.1239
2	6.5436	0.1563
3	5.8272	0.197
4	5.1893	0.2485
5	4.6212	0.3133

CAUTION! Do not disassemble the inverter. Contact with the qualified service center when service or repair is required.

WARNING! Provide ventilation to outdoors from the battery compartment. The battery enclosure should be designed to prevent accumulation and concentration of hydrogen gas at the top of the compartment.

CAUTION! Use insulated tools to reduce the chance of short-circuit when installing or working with the inverter, the batteries, or other equipments attached to this unit.

CAUTION! For battery installation and maintenance, read the battery manufacturer's installation and maintenance instructions prior to operating.

Personnel Precaution -

CAUTION! Careful to reduce the risk or dropping a metal tool on the batteries. It could spark or short circuit the batteries and could cause an explosion.

CAUTION! Remove personal metal items such as rings, bracelets, necklaces, and watches when working with batteries. Batteries can produce a short circuit current high enough to

make metal melt, and could cause severe burns.

CAUTION! Avoid touching eyes while working near batteries.

CAUTION! Have plenty of fresh water and soap nearby in case battery acid contacts skin, clothing, or eyes.

CAUTION! NEVER smoke or allow a spark or flame in vicinity of a battery.

CAUTION! If a remote or automatic generator start system is used, disable the automatic starting circuit or disconnect the generator to prevent accident during servicing.

4. Specifications

MODEL	**Inverter 1200VA**	**Inverter 2400VA**
CAPACITY	1200 VA / 720 W	2400 VA / 1440 W
INPUT		
Voltage	230 VAC	
Voltage Range	90-280 VAC	
OUTPUT		
Voltage Regulation (Batt. Mode)	+/-10%	
Transfer Time	20 ms typical	
Waveform	Simulated Sine Wave	
BATTERY		
Battery Voltage	12 VDC	24 VDC
Floating Charge Voltage	13.7 VDC ± 2%	27.4 VDC ± 2%
Maximum AC Charge Current	10 A or 20 A	
SOLAR CHARGER (OPTIONAL)		
Charging Current	50 A max.	
Maximum PV Array Open Circuit Voltage	40 VDC	60 VDC
PHYSICAL		
Dimension (DxWxH) mm	300 X 360 X 88	
Net Weight (kgs)	4.6	4.8

5. Operation

Power On/Off

Once the inverter has been properly installed, press the power switch to turn on the unit. The unit will work automatically in line mode or inverter mode according to input utility power's status. When press the power switch again, the unit will be turned off.

LED Indicators & Audible Alarms

There are three indicators (Green/Red/Yellow) in the front panel of the unit.

Status	LCD	Indicator	Alarm
Power on: when the unit is powered on, it will enter this mode for 3 seconds.		Three LEDs are on for few seconds.	Off
Standby Mode: bypass output and charger are turned on.	Charged by AC	Floating charging: Green LED steady flash every 10 seconds Constant charging mode: Green LED quickly flashing.	Off
Standby Mode: bypass output and PV charger are turned on. Solar energy is not sufficient to supported all connected loads.	Charged by PV	N/A	Off
Line Mode	Charged by AC	Floating charging: Green LED on. Constant charging mode: Green LED flashing.	Off
	Charged by PV	N/A	
Overcharging in Line Mode		Red LED flashes every four seconds.	Continuously sounding
Overcharging in Standby Mode		Red LED flashes every four seconds.	Continuously sounding
Battery Mode	Output power from battery	Yellow LED on.	Off
	Output power from PV		
Low battery warning	and icons will flash.	Yellow LED flashes every second.	Sounding every second

Status		LCD	Indicator	Alarm
Overload: when connected load is over 110%	Line Mode		Red LED flashes every 0.5 second.	Sounding every 0.5 second
	Battery Mode			
	OVERLOAD and 25% 50% 75% 100% icons will flash.			
Fault Mode			Red LED on.	Continuously sounding

Charging Current Selector

There are two charging current selections: 10A and 20A. Simply switch this selector according to silk printing on the back panel.

6. Trouble Shooting

Use the table below to solve minor problems.

Problem	Possible Cause	Solutions
Utility power is normal but the unit is in battery mode.	AC input power cord is not connected well.	Check AC input power connection.
	Input breaker is activated.	Reset the input breaker.
When power fails, the backup time is shorten.	The unit is overload.	Remove some non-critical loads.
	Battery voltage is too low.	Charge the unit at least 8 hours.
	Battery capacity is not full even after charge the unit for at least 8 hours.	Check the date code of the battery. If the batteries are too old, replace the batteries.
No LED display on the front panel when the utility power is normal.	The unit is not turned on.	Press power switch to turn on the unit.
	Battery is not connected well.	Check the external battery cable and terminal. Make sure all the battery connections to the unit are all correct.
	Battery defect.	Replace the batteries.
	Battery voltage is too low.	Charge the unit at least 8 hours.
The unit is in fault and restart circularly.	The unit is overload.	Verify that the load matches the capability specified in the specification.
	Output is short circuited.	Check the loads and remove loads which cause short circuit.

If there is any abnormal situations occur, which doesn't list above, please call the service people immediately for professional examine.

7.Installation

NOTE: Before installation, please inspect the unit. Be sure that nothing inside the package is damaged.

Connect to Utility and Charge

Plug in the AC input cord to the wall outlet. The unit will automatically charge the connected external battery even though the unit is off.

Connect External Battery

Step 1- Take away the cover of external battery terminal.

Step 2- Following battery polarity guide printed near the battery terminal!
Place the external battery cable ring terminal over the battery terminal.
RED cable to the positive terminal (+);
BLACK cable to the negative terminal (-).

WARNING! Please use the appropriate battery cable. Please refer to **Important Safety Warnings Section** for the details.

Step 3- Tight the battery cables with the M5 nuts. Do NOT place anything between the flat part of battery terminal and the battery cable ring terminal, or overheating may occur. **(See Fig. 1)**

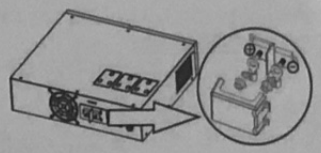

Fig.1

Step 4- Install a DC Breaker in a positive battery line.
The rating of the DC Breaker must be according to the inverter's battery current (75 Amp). Keep the DC breaker off. **(see Fig. 2)**

Step 5- Connect battery cables to the external batteries. Note: For the user operation safety, we strongly recommend that you should use tapes to isolate the battery terminals before you start to operate the unit.

1) **Single battery connection(Refer to Fig. 2):** When using a single battery, its voltage must be equal to the Nominal DC Voltage of the unit **(see below Table 1).**

2)

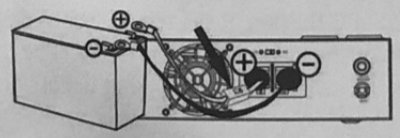

Fig. 2

Table 1

Model	Nominal Battery DC Voltage
Inverter 1200VA	12 VDC
Inverter 2400VA	24 VDC

2) Multiple batteries in series connection(Refer to Fig. 3): All batteries must be equal in voltage and amp hour capacity. The sum of their voltages must be equal to the nominal DC Voltage of the unit.

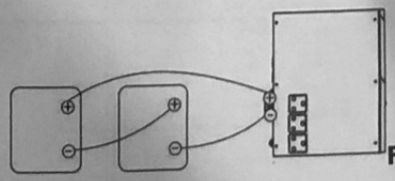

Fig 3

3) Multiple batteries in parallel connection(Refer to Fig. 4): Each battery's voltage must be equal to the Nominal DC Voltage of the unit.

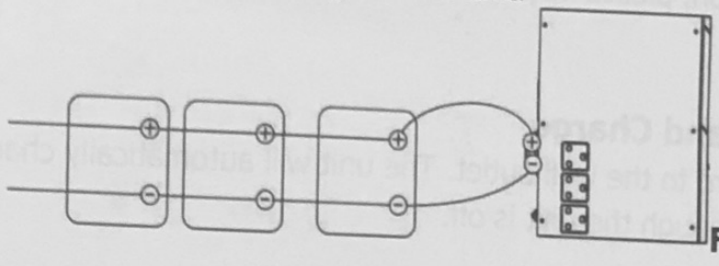

Fig 4

Step 6- Make sure to connect the polarity of battery side and the unit correctly.
Positive pole (Red) of battery to the positive terminal (+)of the unit.
Negative pole (Black) of battery to the negative terminal (-) of the unit.

Step 7- Put the covers back to the external battery terminals.

Step 8- Take the DC breaker on.

Optional Installation for Solar

Following installation only applies when optional solar charger module been purchased and installed into the unit.

Connect to Solar Panel

To prevent any damage to the solar charger, please DO select the solar panel and battery capacity according to recommended specifications below.

Solar Panel	Recommended Spec				
Maximum Output Voltage (Vm)	25 VDC for 1200VA, 50 VDC for 2400VA *1200VA: Maximum open-circuit voltage (Voc) < 40V 2400VA: Maximum open-circuit voltage (Voc) < 60V				
Maximum output current (Im)	50Amp	40Amp	30Amp	20Amp	10Amp
Suggested battery capacity	≧250Ah	≧200Ah	≧165Ah	≧135Ah	≧100Ah

Step 1- Connect one cable to the positive(+) pole of solar panel and solar charger positive (+) terminal.

Step 2- Connect the other cable to the negative (-) pole of solar panel and solar charger negative (-) terminal.

Step 3- Check the solar charging indicator. If the green LED flashes, it means that batteries are charged by solar power. When the batteries are fully charged, the green LED will be lighting. If there is no solar power available, the green LED will be off. If any fault occurs on charger, the red LED will light up. (See following chart)